MOULDINGS ONE

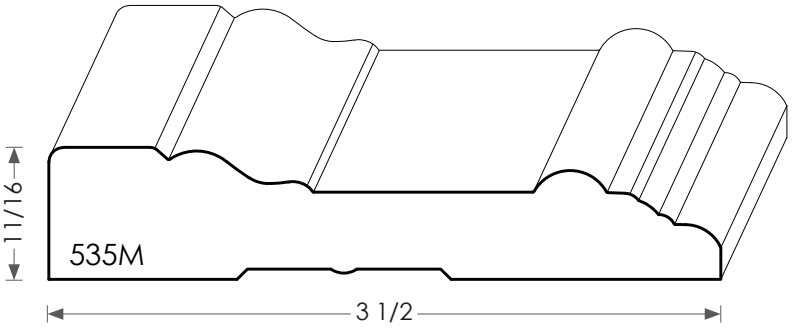

MDF Casing - 535M

PHYSICAL ADDRESS: 13851 STATION ROAD, MIDDLEFIELD, OHIO 44062
MAILING ADDRESS: THE HARDWOOD LUMBER COMPANY - P.O. BOX 15 BURTON, OHIO 44021
P. 440-834-3420 OR 1-877-708-4095 F. 440-834-3422
HOURS: MON.-FRI. 8AM-4:30PM, SAT. 8AM-12NOON
www.mouldingsone.com